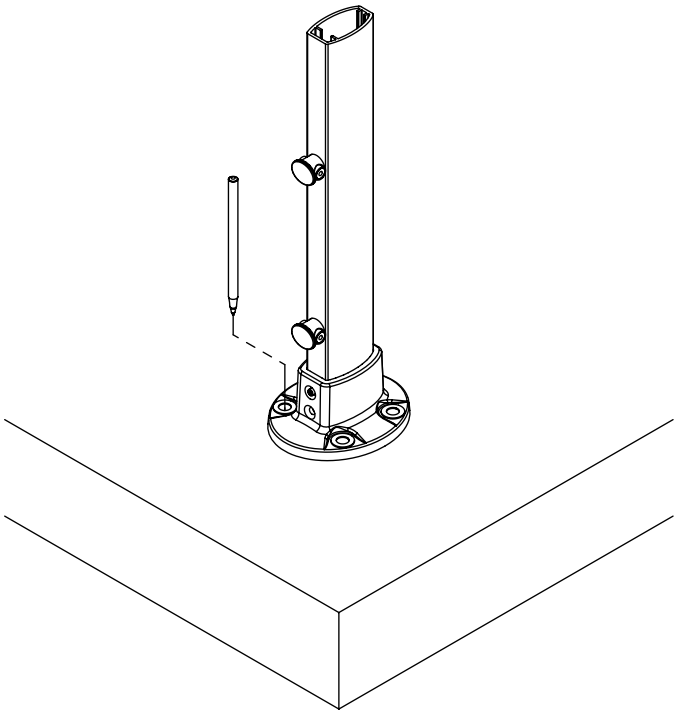

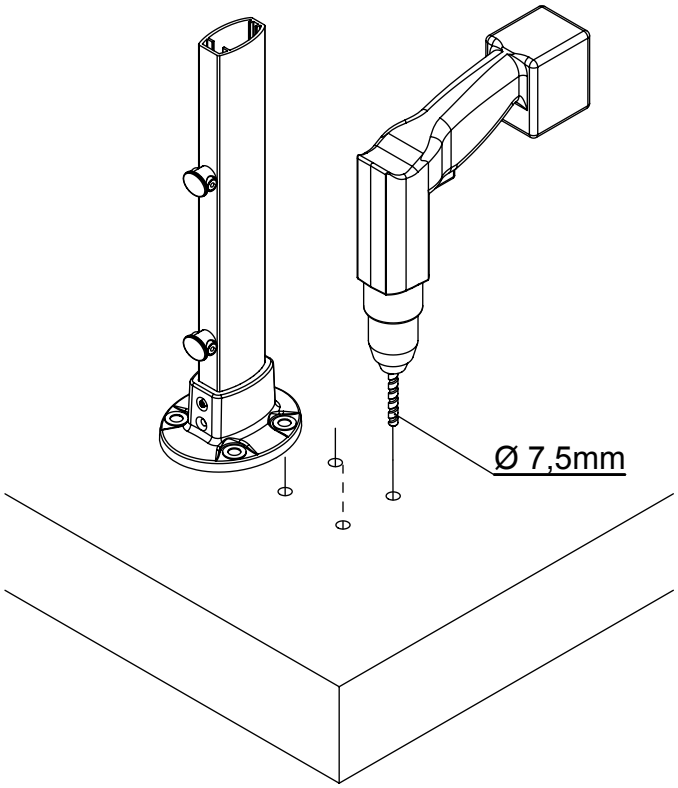
Ø 7,5mm

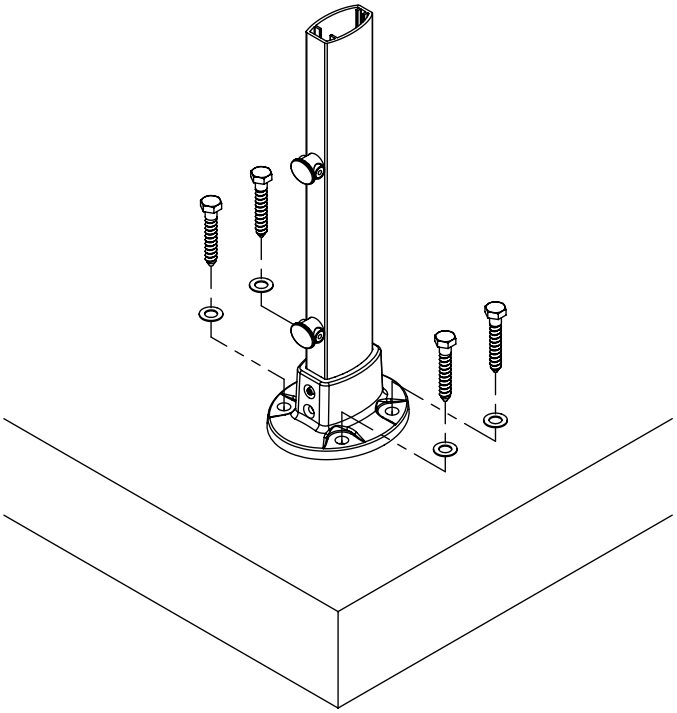

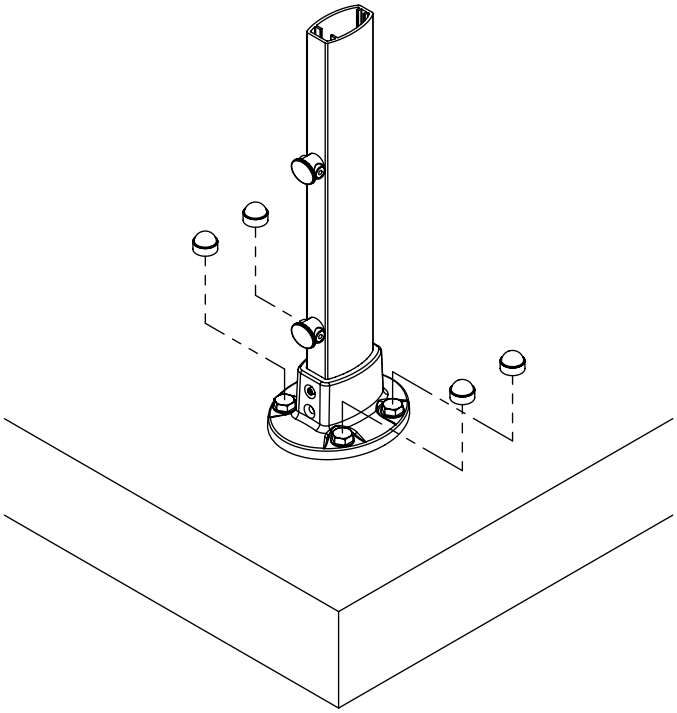

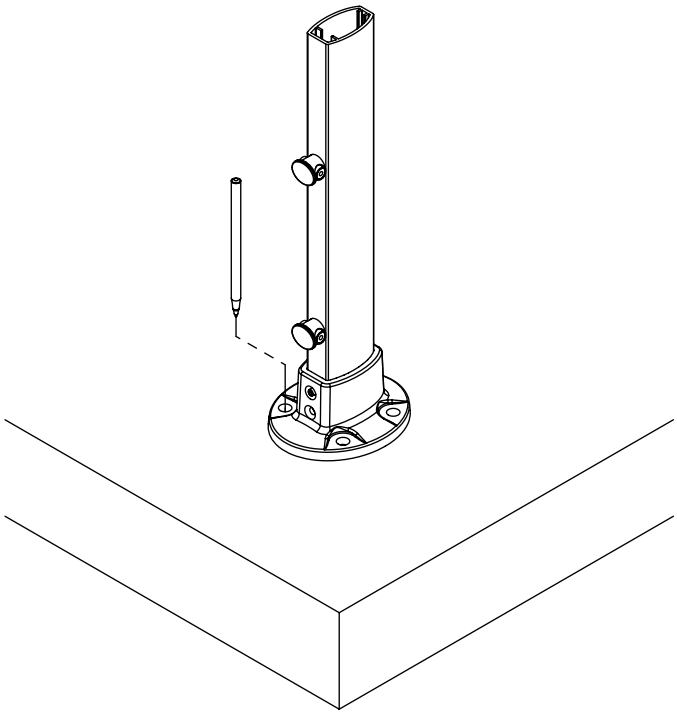

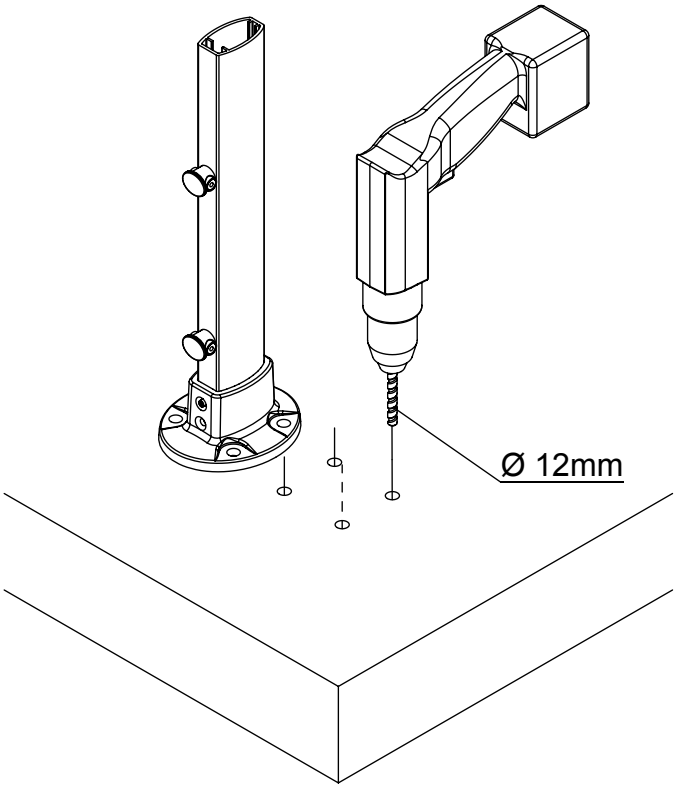
Ø 12mm

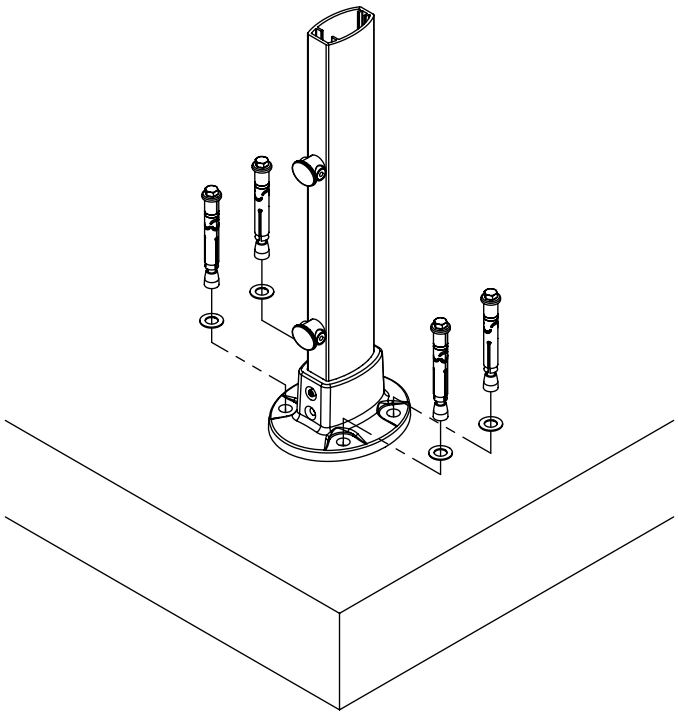

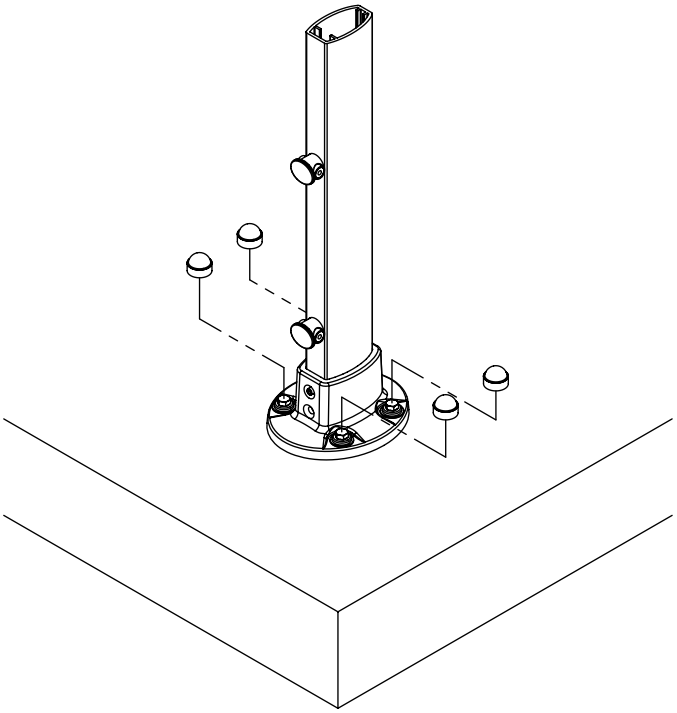

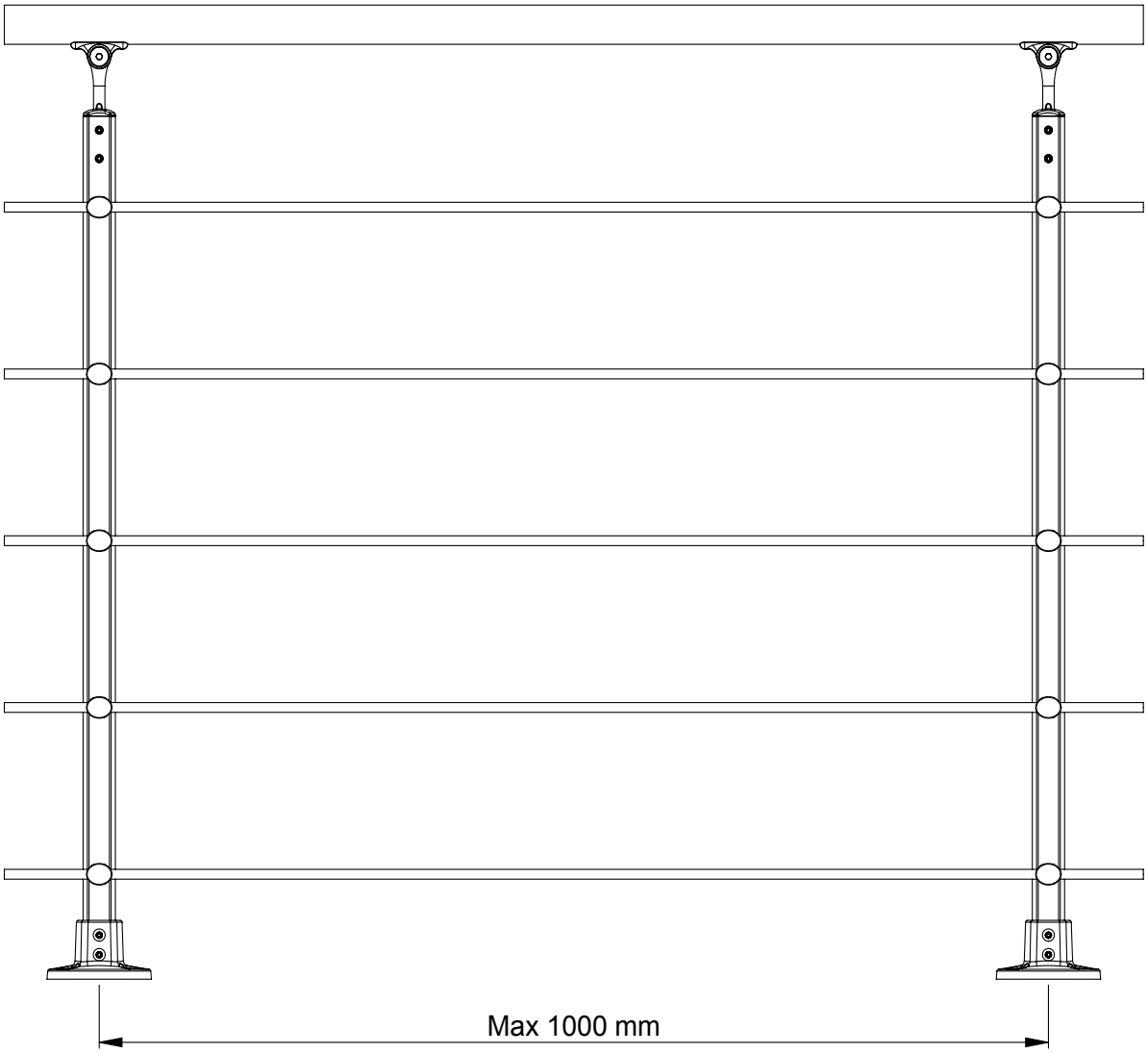
Max 1000 mm

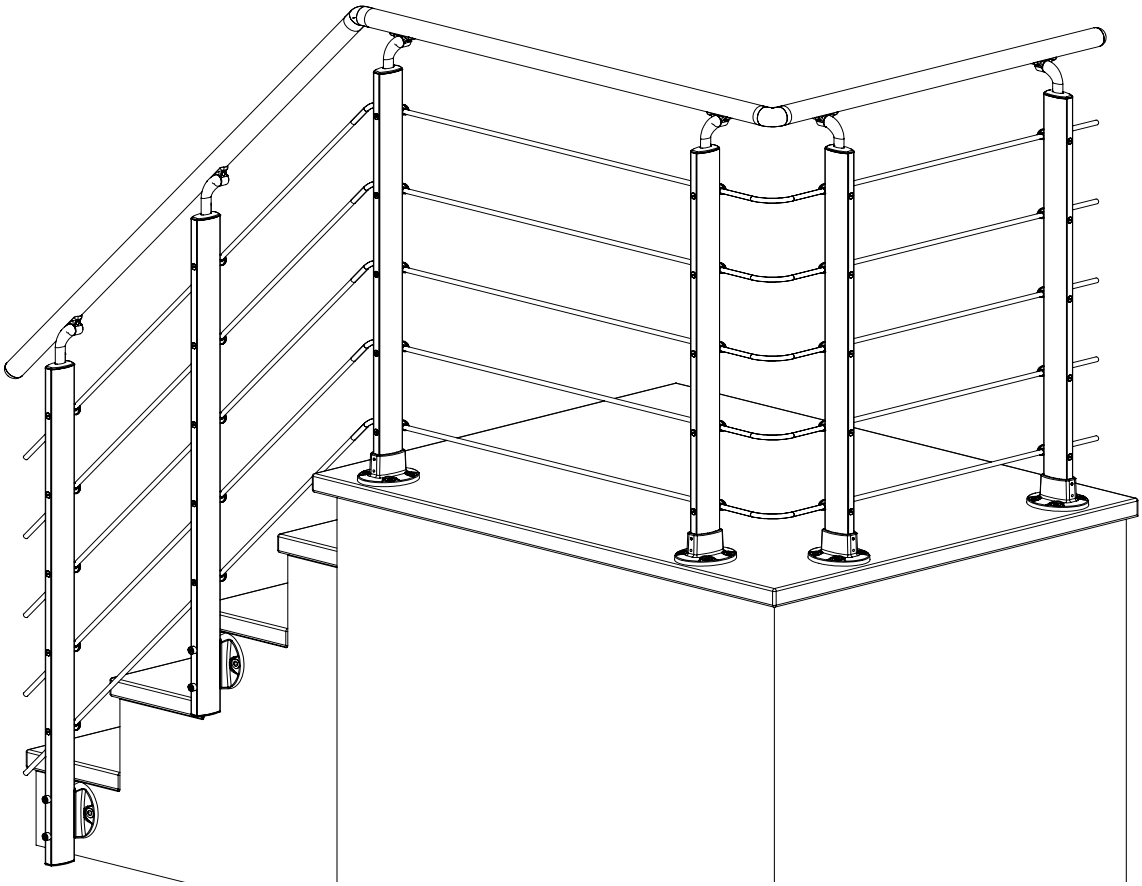

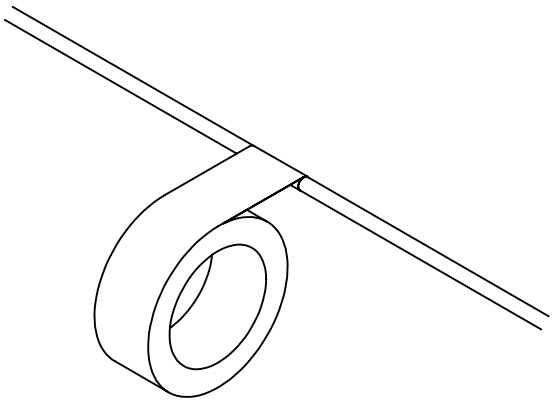

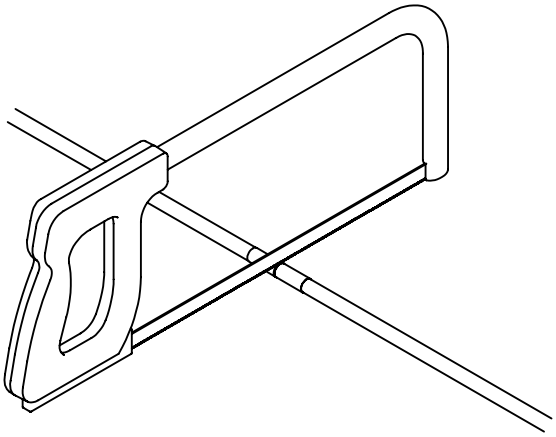

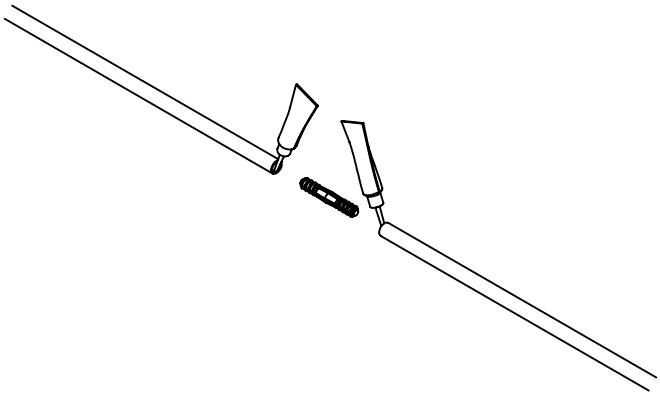

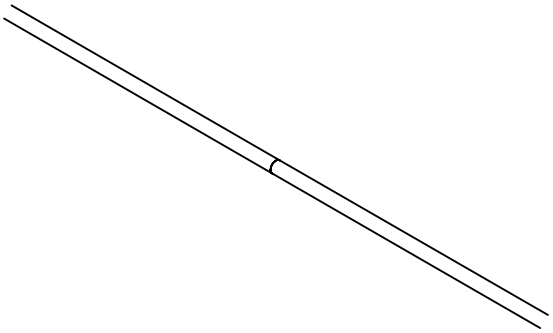

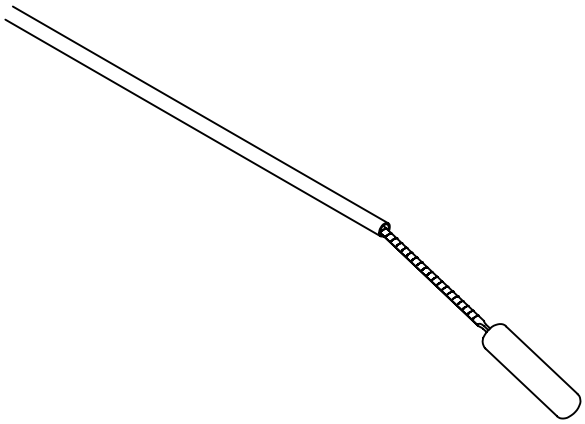

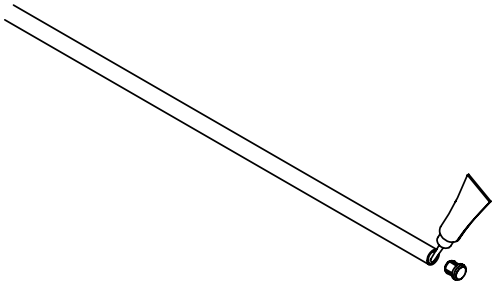

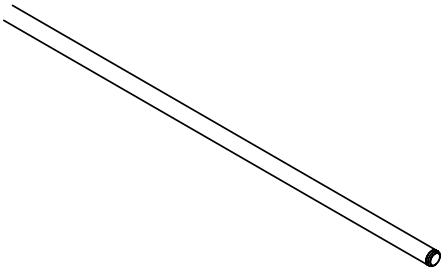

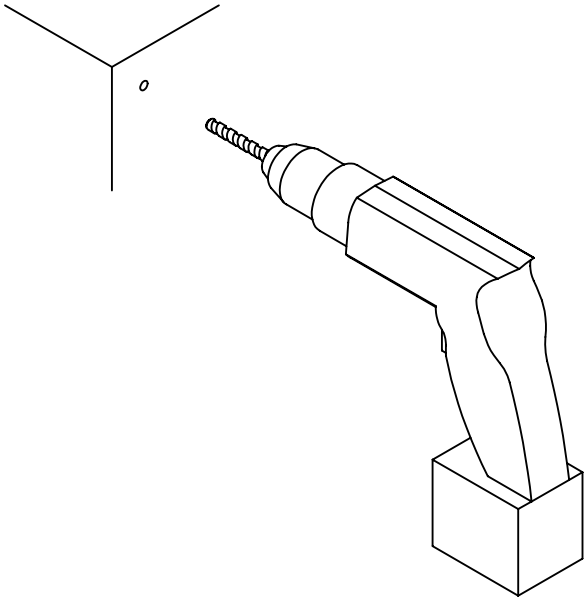

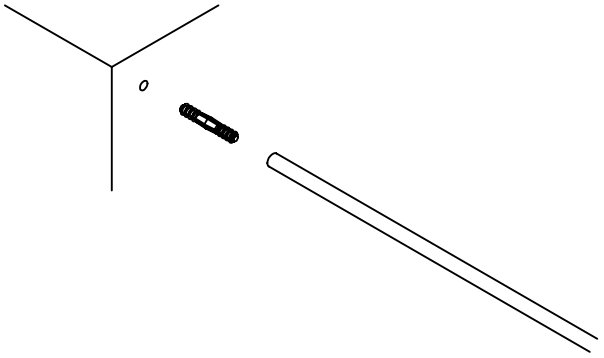

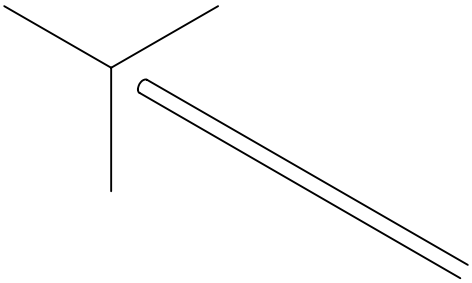

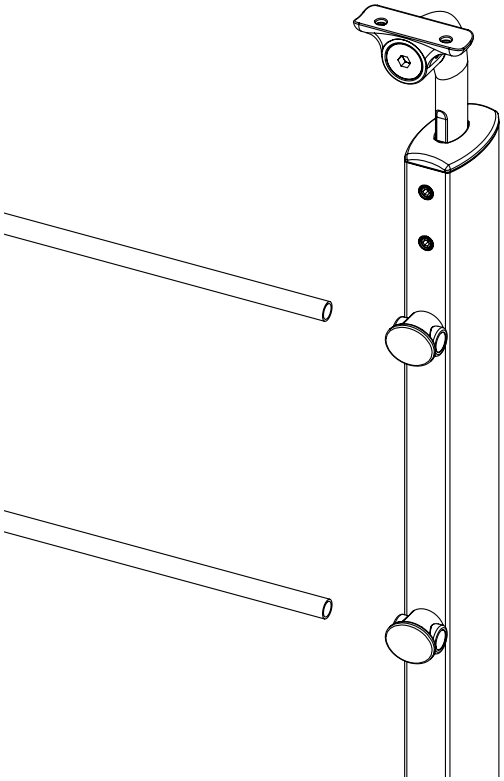

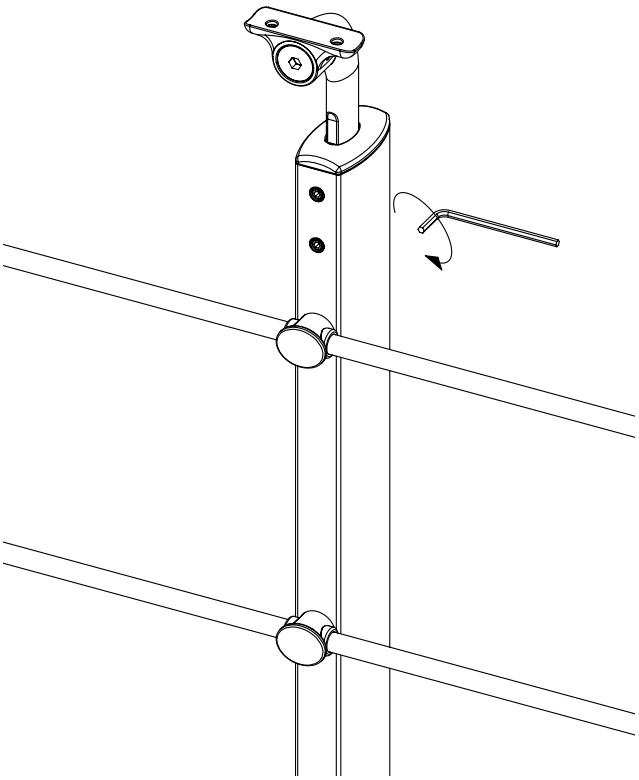

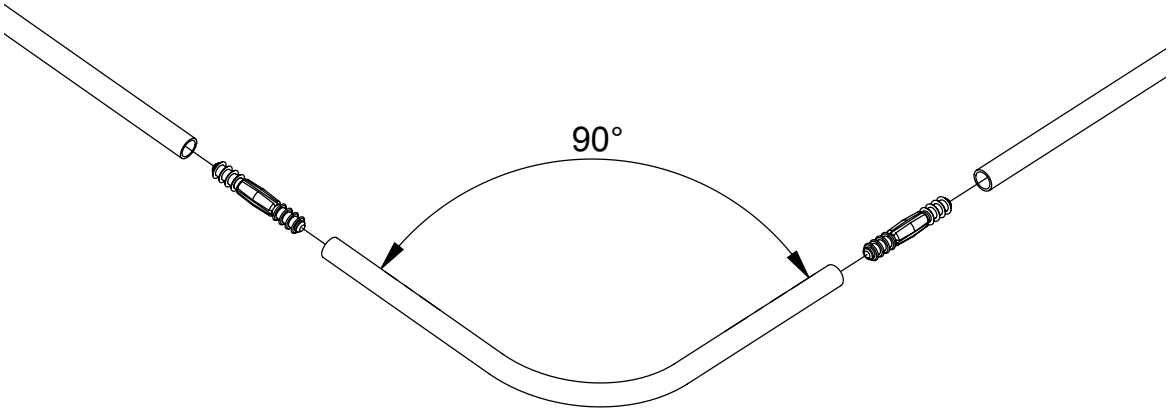
90°

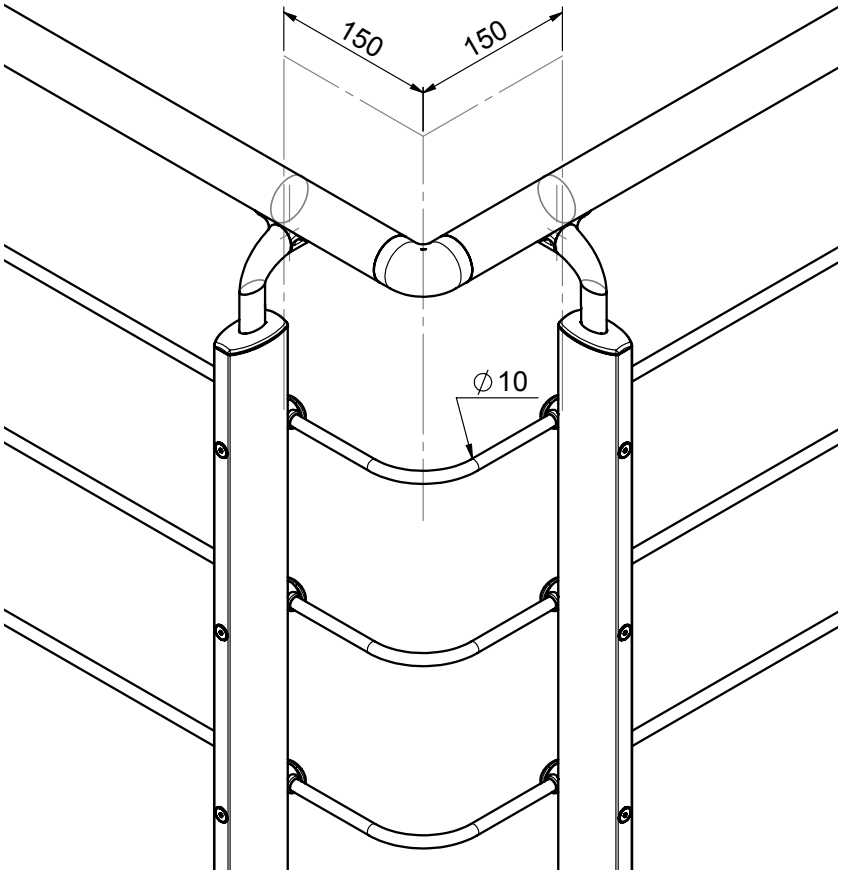
150
150
∅10